Viking Ranger Audio Driver Schematic by WA1QIX

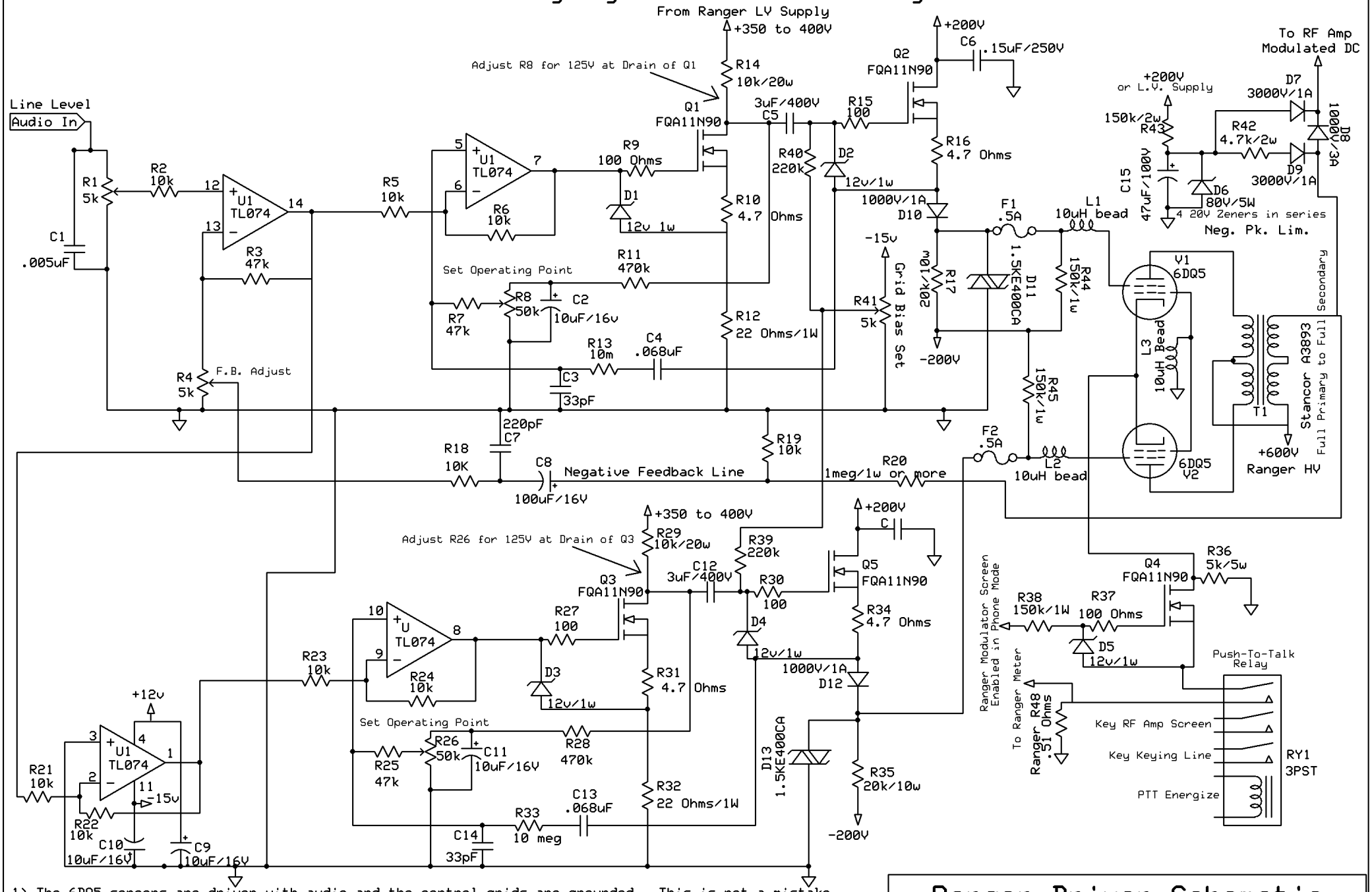

1) The 6DQ5 screens are driven with audio and the control grids are grounded. This is not a mistake.
2) This circuit is very Ranger specific due to the number of voltages available in the Ranger. Similar implementations can be accomplished with fewer power supply voltages.
3) Screen-grid-only drive may not work properly with other tube types! You will likely have to drive both the grid and the screen and provide some DC difference between the two of them.
4) The +/- 200VDC is derived from a bridge rectifier / capacitor input filter off the bias supply winding of the Ranger power transformer.
5) R20 value yields 6VDC across R19 with plate voltage. Use several resistors in series if necessary.

Ranger Driver Schematic		
Steve, WA1QIX		
Steve Cloutier	Rev B-1 2/6/2012	Page 1 of 1